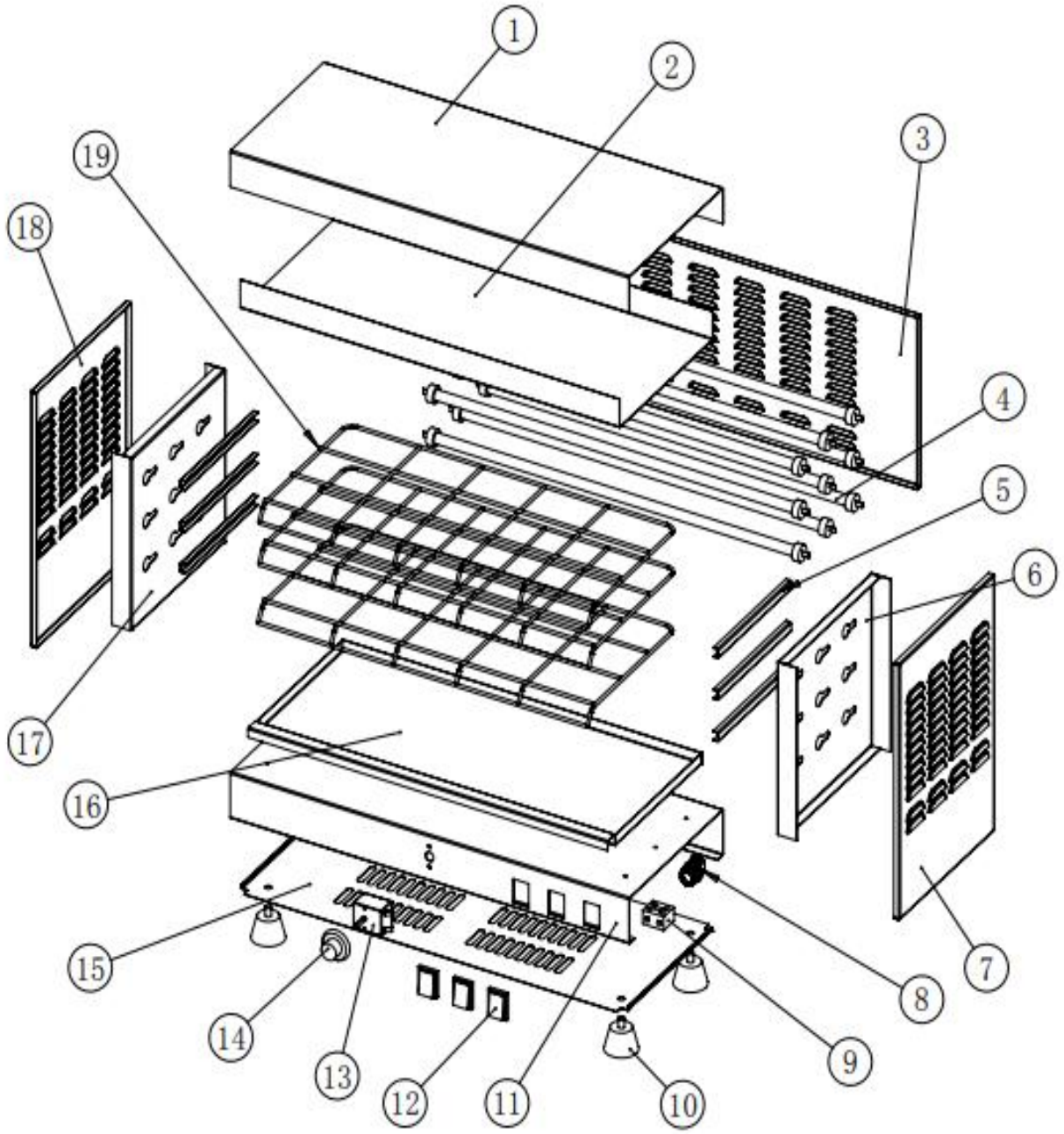

NO.	NAME	PRICE (USD)
1	Top Cover Plate	
2	Inner Chamber Top Plate	
3	Rear Cover Plate	
4	Heating Element	
5	Shelf Support Bar	
6	Inner Chamber Right Side Plate	
7	Right Side Plate	
8	Power Cord Gland	
9	2-position terminal	
10	small rubber foot	
11	base plate	
12	switch	
13	timer	
14	knob	
15	bottom cover plate	

NO.	NAME	PRICE (USD)
16	crumb tray	
17	Inner Chamber Left Side Plate	
18	Left Side Plate	
19	Wire Rack	